Instruction manual

2026-10-08

Potato peeler 100-150 kg/h 5 kg
C/E PP 5

www.rmgastro.com

TABLE OF CONTENTS

1. DECLARATION OF CONFORMITY 3

2. TECHNICAL DATA 3

3. LOCATION ELECTRIC 3

4. SAFETY MEASURES FOR FIRE PROTECTION 3

5. INSTALLATION 4

6. WATER CONNECTION 4

7. CONNECTING THE ELECTRICAL CABLE TO THE NETWORK 4

8. INSTRUCTIONS FOR USE 5

9. CLEANING AND MAINTENANCE 11

1. DECLARATION OF CONFORMITY

Decree of the Ministry of Health of the Czech Republic no. 38/2001 Coll. of 19 January 2001 Regulation (EC) No 1907/2006 - Registration, Evaluation, Authorisation and Restriction of Chemicals (REACH) Regulation of the European Parliament and Council Regulation (EC) no. 1935/2004 of 27 October 2004

The products meet the requirements of §26 of Act No.258/2000 as amended. The products meet the requirements of RoHS Directive 2015/863/EU, 10/2011, 517/2014, 2015/1094, 2015/1095.

Attention, the manufacturer gives up any responsibility in case of direct and indirect damage that is relate to poor installation, incorrect intervention or adjustments, insufficient maintenance, incorrect by using and which are eventually caused by other causes that the points referred to in the conditions sales. This appliance is intended only for professional use and must be operated by qualified by persons. Parts that have been secured by the manufacturer or authorized worker after the setting rebuild.

2. TECHNICAL DATA

The label with technical data is located on the side or back panel of the device. Please read the wiring diagram and all the following information in the attached manual before installation.

Net Width [mm]	Net Depth [mm]	Net Height [mm]	Net Weight [kg]	Power electric [kW]
413	1072	1072	30.00	0.270

Loading	Gross depth [mm]	Gross Height [mm]	Maximal production per hour [kg/h]	Gross Volume [m3]
400 V / 3N - 50 Hz	520	670	150	0.181

Net Volume [m3]	Gross Weight [kg]	Weight capacity of the device container [kg]	Gross Width [mm]
0.271	32.00	5.00	520

3. LOCATION ELECTRIC

For the correct operation and placement of the appliance, it is necessary to observe the following all prescribed standards for the given market. Unpack the device and check that the device has not been damaged during transport. Place the device on a horizontal surface (maximum unevenness up to 2°). Small unevenness can be leveled with adjustable feet. If the device will be placed in such a way that it will be in contact with the walls of the furniture, these must withstand a temperature of up to 60°C. Installation, adjustment, commissioning must be performed by a qualified person who is authorized to perform such operations, according to applicable standards. The device can be installed separately or in series with devices of our production. A minimum distance of 10 cm from flammable materials must be observed. In this case, it is necessary to secure the appropriate modifications to ensure the thermal insulation of the combustible parts. The appliance must only be installed on a non-flammable surface or against a non-flammable wall. **Parts of the appliance provided by the manufacturer. or his representative, the worker performing the installation may not rebuild the product.**

4. SAFETY MEASURES FOR FIRE PROTECTION

- the appliance may only be operated by adults
- the appliance may be used safely in accordance with applicable market standards:

Fire protection in spaces with special risk or danger

Protection against the effects of heat

- the appliance must be placed so that it stands or hangs firmly on a non-combustible surface

Objects of flammable substances must not be placed on the appliance at a distance less than a safe distance from it (the smallest distance between the appliance and flammable substances is 10 cm).

Table: degree of flammability of building materials included in st. flammability of substances and products

Degree of flammability	Building materials
A - non-flammable	granite, sandstone, concrete, brick, ceramic tiles, plaster
B - Not easily flammable	Acumin, Heraclitus, Lihnos, Itaver
C1 - highly flammable	wood, hardwood, plywood, hard paper, umakart
C2 - moderately flammable	chipboards, solodur, cork boards, rubber, flooring
C3 - Highly flammable	wood fiber boards, polystyrene, polyurethane, PVC

- information on the degree of flammability of common building materials is given in the table above. Appliances must be installed in a safe manner. During installation, the relevant design, safety and hygiene regulations must also be respected:
- fire safety of local appliances and heat sources
- fire protection in areas with special risk or danger
- protection against the effects of heat

5. INSTALLATION

Important: The manufacturer does not provide any warranty for defects arising as a result of incorrect use, failure to follow the instructions contained in the attached user manual and mishandling of appliances. Installation, modification and repair of appliances for large kitchens, as well as their dismantling due to possible damage to the gas supply, can only be carried out on the basis of a maintenance contract, this contract can be concluded with an authorized dealer, while technical regulations and standards and regulations must be observed regarding installation, electrical supply, gas connection and work safety. Technical instructions for installation and adjustment, for use by specialized technicians ONLY. The instructions that follow refer to a technician qualified for installation to carry out all operations in the most correct manner and according to the applicable standards. Any activity related to regulation etc. must only be performed with the device disconnected from the network. If it is necessary to keep the appliance under voltage, the utmost care must be taken. The type of appliance for extraction is declared on the nameplate, it is an A1 appliance.

6. WATER CONNECTION

Water connection is done using G1/2 threaded hoses. The water supply must be fitted with separate closures that are freely accessible and within reach of the device. The device includes return valves. The water for filling the duplicator space must be softened - a maximum of 5 ° the French scale of water hardness. The water pressure must be in the range of 50-300 kPa.

7. CONNECTING THE ELECTRICAL CABLE TO THE NETWORK

Installation of the electrical supply - this supply must be separately secured. Ato with the corresponding circuit breaker of rated current depending on the power input of the installed device. Check the power consumption of the device on the production label on the back panel (or side) of the device. The connected ground wire must be longer than the other wires. Connect the device directly to the network, it is necessary to insert a switch between the device and the device with a minimum distance of 3 mm between the individual contacts, which corresponds to the applicable standards and load. The earth supply (yellow-green) must not be interrupted by this switch. Connect the device to the mains if the socket has adequate protection. In any case, the supply cable must be located so that it does not reach a temperature of 50 degrees higher than the environment at any point. Before the appliance is connected to the network, it is necessary to first make sure that:

- the supply circuit breaker and the internal distribution can withstand the current load of the appliance (see matrix label)
- the distribution board is equipped with effective grounding according to the standards of the relevant market and the conditions given by law
- the socket or switch in the supply is easily accessible from the appliance

- the electrical supply to the device must be made of oil-resistant material

We disclaim any responsibility in the event that these standards are not respected and in the event of a violation of the above principles. Before first use, you must clean the device, see chapter """"cleaning and maintenance"""". The appliance must be grounded using a screw with a grounding mark.

- Do not insert the plug of the power supply into the electrical outlet. sockets and do not pull out the zel. sockets with wet hands and pulling on the power cord!
- Do not use extension cords or multiple sockets.
- **The mains connection point must have a maximum of the following impedance: ZMAX = 0.042 + j 0.026 Ω for the phase conductors and 0.028 + j 0.017 Ω for the neutral conductor.**

Models	Dimensions (mm)
C/E PP5	580x670xH700
C/E PP5T	700x850xH1100
C/E PP10T	700x850xH1100
C/E PP20T	700x850xH1200
C/E PP30T	700x850xH1360
C/E PP50	750x1100xH1400

Connecting

The machine is equipped with a plug that is used to connect it to a mains socket.
The types used are shown schematically in Fig. 1.

Check and, if necessary, adjust the electrical grounding equipment of the machine installation site.

Fig. 1

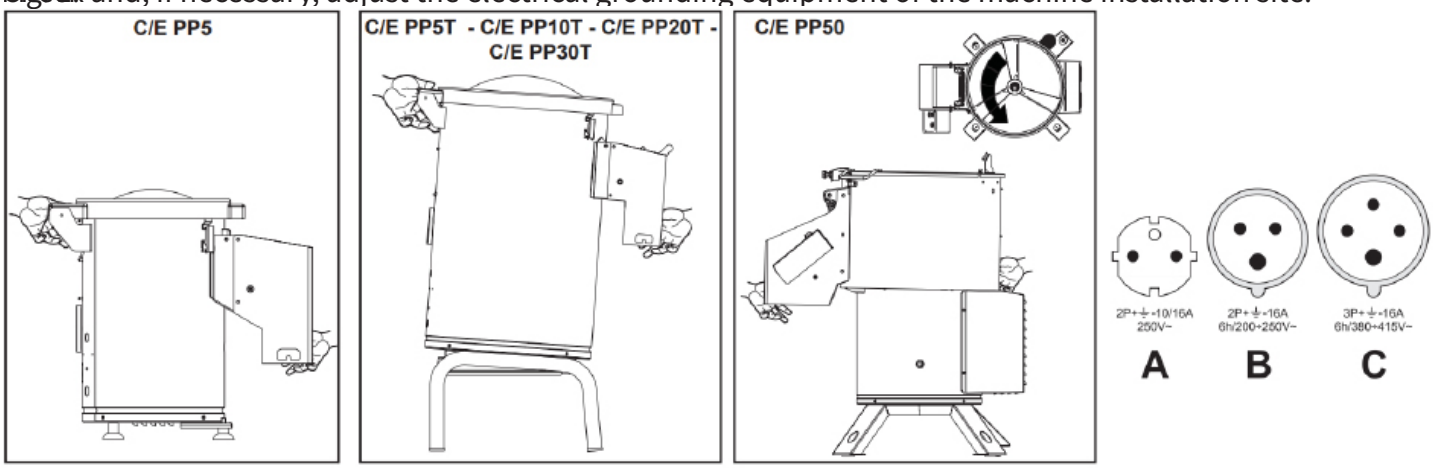

8. INSTRUCTIONS FOR USE

Machine location

A clear space must be maintained around the machine to allow easyfor all work and maintenance operations (1 m on the operator's side).

The machine must be positioned stably, vertically and the site must be protected from any mechanical vibration

origin. For this reason, the models C/E PP5T, C/E PP10T, C/E PP20T, C/E PP30T, C/E PP50 are equipped with 3 fixed legs with holes for possible fixing to the floor with wedges or screws, and one adjustable leg (Fig. 2 reference A), which is used for levelling the machine.

The machine needs both an electrical connection, using the appropriate plug (single phase/three phase) plugged into a socket powered from

network, as well as water inlet and outlet connections. The water inlet is provided by a pipe connection (Fig. 3, reference A), which must also be connected to the tap of the main water supply device (Fig. 3, reference B, if available).

In order to discharge the water used to remove the skins, together with the skins removed, the following must

the drain of the potato peeler be connected via pipe C to the drainage network of the room in which the machine is installed. A filter must be used to retain solids at the connection. The use of such a filter is compulsory under the applicable water pollution prevention laws. It can be supplied with the machine equipment on request.

KEEP IN MIND THAT ALL WORKERS ARE PROHIBITED FROM APPROACHING MOVING MACHINE PARTS DURING THE WORK PROCESS. THE MACHINE MUST FIRST BE DE-ENERGISED BY USING THE APPROPRIATE STOP BUTTON, WHICH IS DESCRIBED LATER.

Fig. 2.

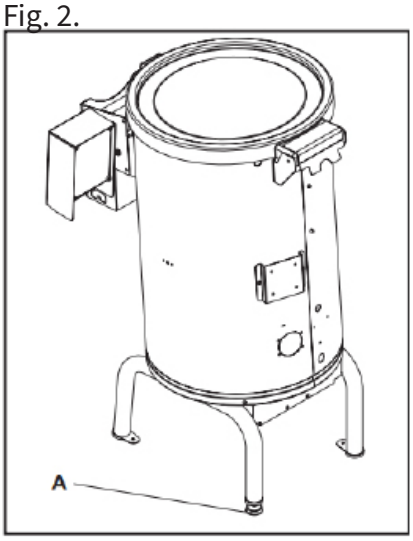

Fig. 3.

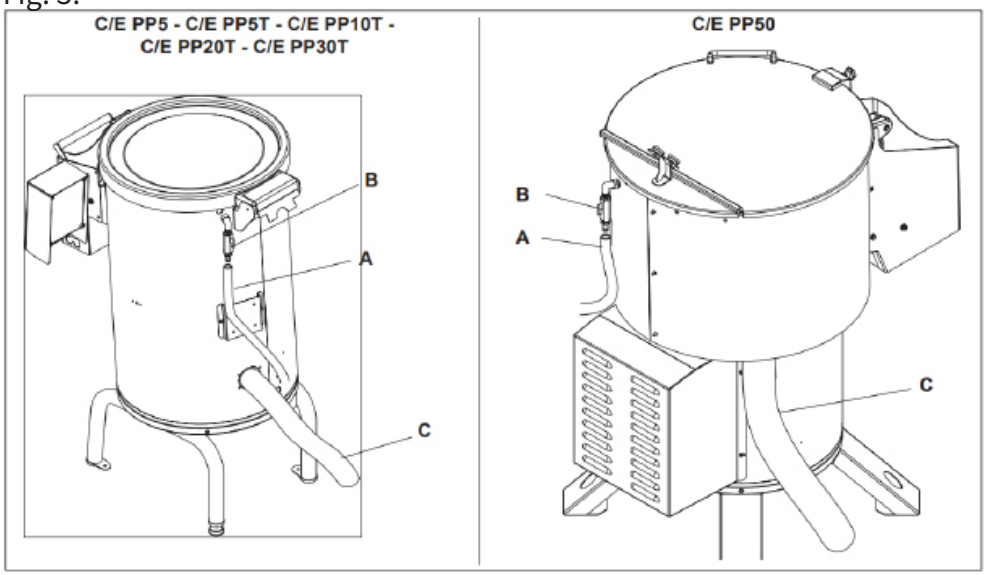

After positioning the machine, perform the steps in the following sequence:
- connection of pipes providing water inlet - outlet
- electrical connections
- launch
- rotation direction control
- checking the effectiveness of safety devices
- on.

The machine is designed for scraping potatoes and carrots. It consists of a container, the inner side of which is covered with abrasive material (Figure 4, reference A), and a movable plate, which is also covered with abrasive material (Figure 4, reference B). This plate performs a rotary movement and causes the product to roll, by means ofm friction against the walls, which are covered with abrasive material, causes the product to scrape.

In order to avoid linear rolling and to prevent the product from being constantly scratched on one side only, the plate is equipped with bumps (Fig. 4, reference C), which allows continuous rolling of the product and thus uniform scraping of the product. Cold water is introduced into the chamber via an injector (Figure 4, reference E), which carries away the waste and also acts as a softener to soften the peel to be removed.

Depending on the time and the amount of product used, different types of scraping can be performed. The-

Fig. 4.

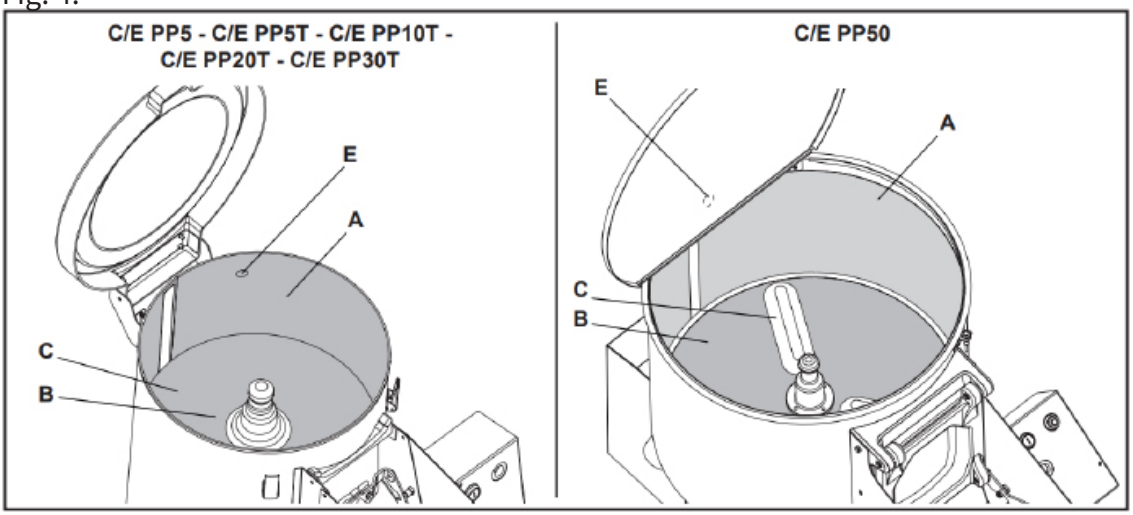

WHEN FILLING THE CONTAINER WITH THE PRODUCT TO BE SCRAPED, WE RECOMMEND A MAXIMUM FILLING HEIGHT OF APPROXIMATELY 7 CM FROM THE EDGE OF THE CONTAINER. ONLY THEN WILL THE PRODUCT HAVE SUFFICIENT FREEDOM OF MOVEMENT DURING THE PROCESSING PHASE.

When the scraping is finished, remove the product as follows: keep the machine moving, at the same time open the exit door (Fig. 5 reference A) and lock it in position (fig. 5).

As the exit door (Fig. 5, reference A) opens only outwards, no hands or other objects can be inserted into the machine. An additional safety device consists of a magnetic sensor, which is located at the points corresponding to thec/E PP5, C/E PP5T, C/E PP10T, C/E PP20T, C/E PP30T, and under the front handle on the C/E PP50 (see page 5). 12). This sensor deactivates machine operation when the lid is raised.

Fig. 5

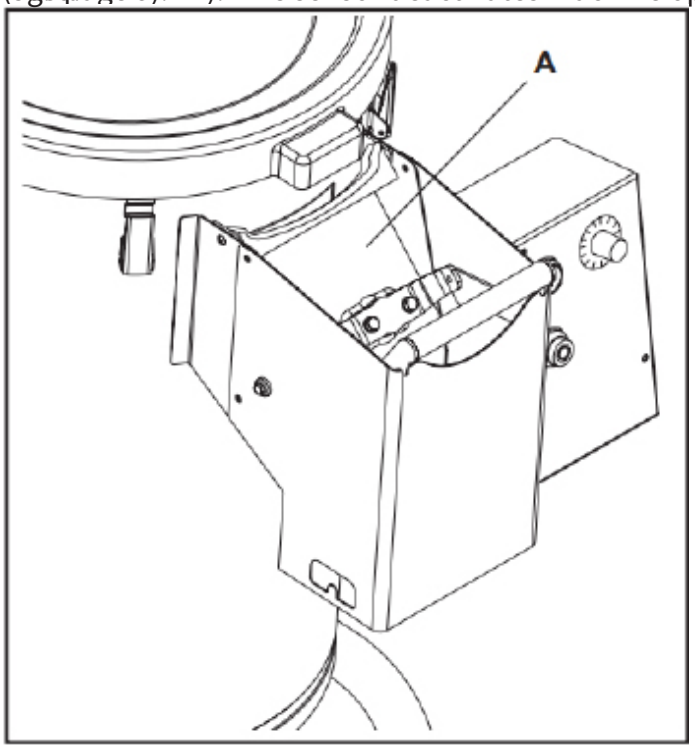

KEEP IN MIND THAT TO REMOVE THE PRODUCT FROM THE TOP SIDE, THE MACHINE MUST FIRST BE STOPPED.

NEVER USE BLUNT TOOLS (SUCH AS SCREWDRIVERS, KNIVES, ETC.)) INTO THE MECHANICAL COMPONENTS USED TO PROTECT AGAINST INJURY IN ORDER TO REACH MOVING PARTS.

Keep in mind that the abrasive layer on the plate is solid, so when the layer is worn, it must be replacing the entire plate. Conversely, the abrasive belt, which is located on the inner side surface of the chamber, can be replaced with a new abrasive belt after wear.

Keep in mind that if you need to replace parts of the machine (grinding plate, grinding belt, etc.), you must contact an authorized RM GASTRO Sp. z o.o. dealer.

KEEP IN MIND THAT IT IS FORBIDDEN FOR ALL WORKERS TO CARRY OUT MAINTENANCE AND CLEANING OPERATIONS ON A MACHINE THAT IS IN MOTION. THE MACHINE MUST FIRST BE DE-ENERGISED VIA THE APPROPRIATE STOP BUTTON AND THE PLUG MUST BE DISCONNECTED.

Control panel

The machine has a very simple control panel that is easily accessible and easy to see. It is made of hermetically

the sealed box that they're on:

- RELEASE button (Fig. 6 reference A)
- STOP button (fig. 6 reference B)
- Timer (Fig. 6 reference C).

THE START BUTTON IS ONLY OPERATED WHEN THE MACHINE LID IS CLOSED (APPROVAL OF THE SAFETY SWITCH).

Once the moving parts have been positioned by means of the attached push button (fig. 6, reference 6.

Fig. THEREFORE NECESSARY TO WAIT UN-

E -1.1.2.b PARAGRAPH 3 - MACHINERY

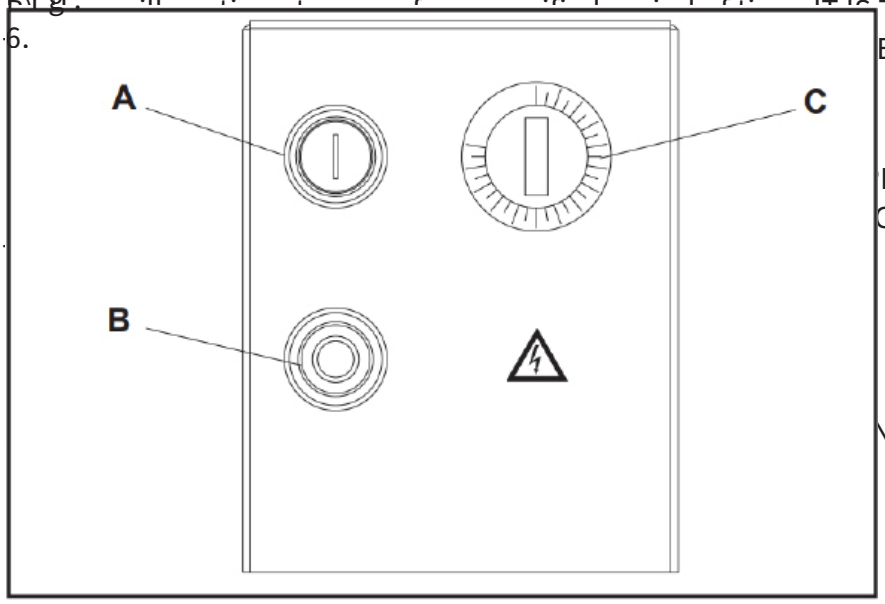

ROACHING MOVING MACHINE PARTS

CONNECTED FROM THE MACHINE VIA

MOVING PARTSCLOTHING, HANGING

NG HAIR.

Cleaning and maintenance

Routine cleaning must be carried out on the machine in accordance with the guidelines set out in Directive 93/43 EC (HACCP).

All maintenance tasks that are listed in this instruction manual must be performed according to the instructions contained in the manual. Only suitably trained personnel who have the necessary competence to intervene on the machine may carry out the tasks given.

In the case of maintenance interventions that are not specified in this manual and in the case ofnecessary repairs, it is advisable to contact the authorised dealer who arranged the sale of the machine or RM Gastro, who will direct you to the nearest authorised assistance service.

The recommended procedure is as follows:

- Using the appropriate handle (Fig. 7, reference A), remove the scraping disc and, using water, remove the remaining peel from the

of the disc and the inside of the container. Do not use any solvents or cleaning agents!

Reinstall the disc when this is complete. Make sure that the joint (Fig. 8 reference A) located under the disc matches the drift plug on the shaft (Fig. 8 reference B).

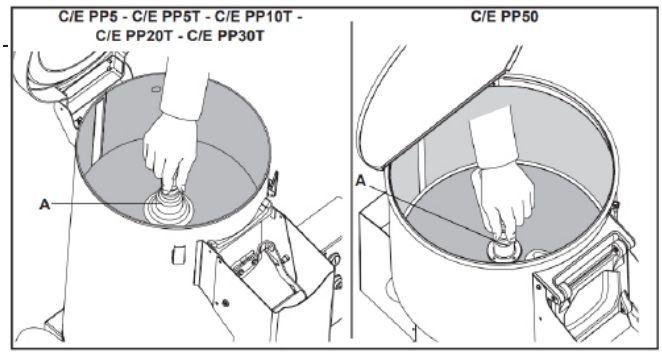

Fig. 7

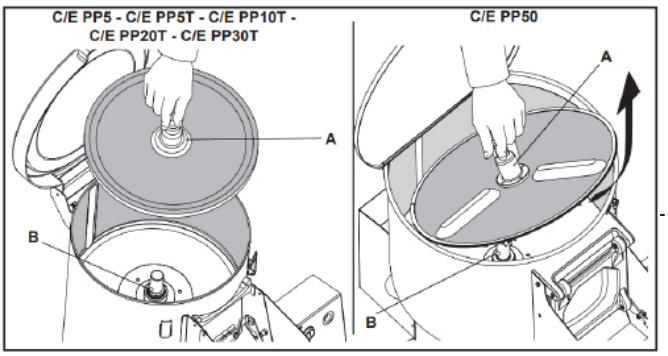

Fig. 8

Stainless steel container with filter (optional) ENA sediment collection container can be installed on the machine, equipped with

filter.

This operation requires certain adjustments, which must be carried out in accordance with the instructions given in this manual, by workers who have been properly trained and who have the necessary competence to operate the machine:

- Place the machine on a flat surface and unscrew the screws that secure the roller to the base (Fig. 9).
- Separate the bottom of the machine from the base (Fig. 10).
- Pull the drain tube out of the rear cylinder opening (Fig. 11).
- For the C/E PP5, it is necessary to replace the bottom that is installed in the version with legs with a bottom designed for the table-top version.
- Insert the drain tube into the hole at the bottom of the machine (Fig. 12).
- Screw the cylinder back onto the base (fig. 13). Make sure that the machine face (product discharge opening) is at the bottom of the work table surface (it is tilted forward).
- Use the lid included with the machine to close the tube passage hole (which has been used) at the back of the machine.
- Cut off the excess part of the tube under the machine so that it does not interfere with moving the sediment collection container (Fig. 14).

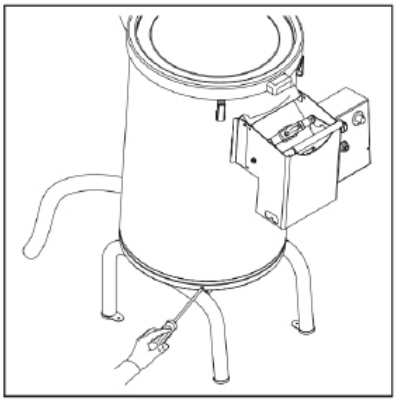

Fig. 9.

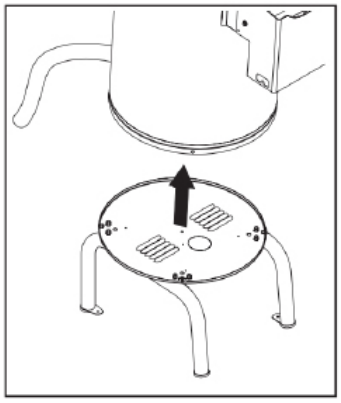

Fig. 10.

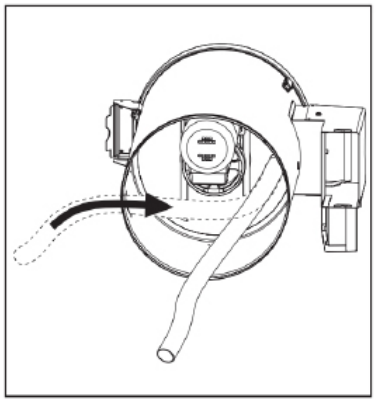

Fig. 11.

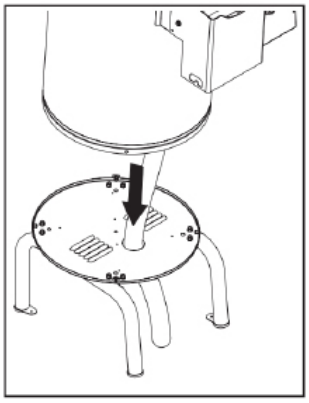

Fig. 12.

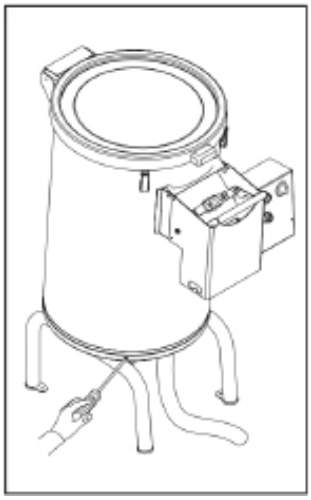

Fig. 13.

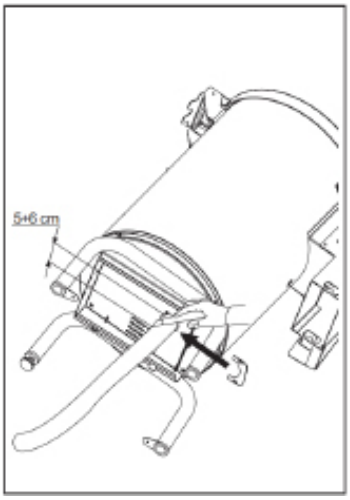

Fig. 14.

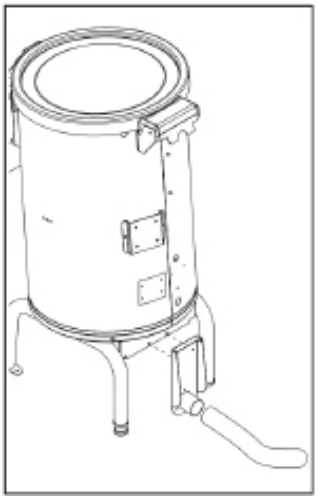

Fig. 15.

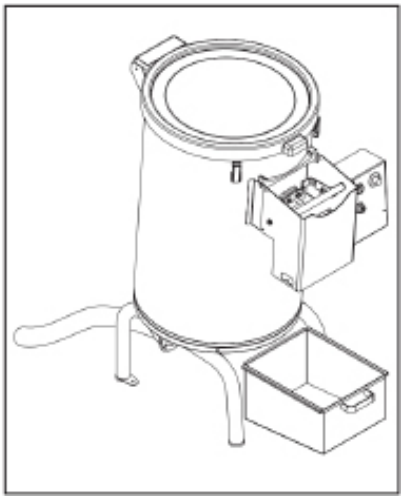

Fig. 16.

9. CLEANING AND MAINTENANCE

It is recommended to have the device checked with a specialist service at least once a year. All the interventions in the device can only be carried out by a qualified person who has the authorization to do so. **CAUTION!** The device must not be cleaned with direct or pressure water. Clean the equipment daily. Daily maintenance extends the life and efficiency of the equipment. Always turn off the main inlet to the device. Wash the stainless steel parts with a damp cloth with a detergent without coarse particles and wipe dry. Do not use abrasive or corrosive cleaning agents. Attention! Before using the device, it is necessary to remove the protective foil from the entire surface, and then wash it well with water with detergent, and then wipe it with a damp cloth. **ALERT!** The warranty does not apply to all consumables subject to normal wear (rubber seals, bulbs, glass and plastic parts, etc.). The warranty also does not apply to the device if the installation is not carried out in accordance with the instructions - an authorized worker according to the corresponding standards and if the equipment was unprofessionally manipulated (interventions in the internal equipment, etc.) or were operated by unhappy staff and contrary to the instructions for use, further The warranty does not apply to damage by natural effects or other external intervention. **Required service organization 2 times a year. After the lifetime, the shipping packaging and equipment are submitted to the collection, according to the regulations on waste management and hazardous waste.**